CFPS-74 SMD CLOCK OSCILLATORS

ISSUE 5; 1 NOVEMBER 2008 - RoHS 2002/95/EC

Description

- ±20ppm all causes for 15 years, surface mount oscillator in a ceramic package with a hermetically sealed metal lid

Package Outline

- 7 x 5mm

Frequency Range (Developed Frequencies)

- 12.80, 19.440, 20.0, 20.480, 27.0, 40.0, 44.23220, 44.621770, 64.0, 77.760MHz

Output Compatibility & Load

- Tri-state HCMOS
- Drive Capability: 15pF

Frequency Stability

- ±20ppm all causes over 15 years inclusive of Frequency Tolerance, Supply Voltage Variation, Load Variation, Ageing.

Operating Temperature Range

- 0 to 70°C

Storage Temperature Range

- –55 to 125°C

Tri-state Operation

- Logic '1' to pad 1 enables oscillator output, 2.5V min
- Logic '0' to pad 1 disables oscillator output; when disabled the oscillator output goes to the high impedance state, 0.5V max
- No connection to pad 1 enables oscillator output

Marking Includes

- Model Number + Frequency

Packaging

- Bulk or Tape and Reel

Minimum Order Information Required

- Frequency + Model Number

Outline in mm

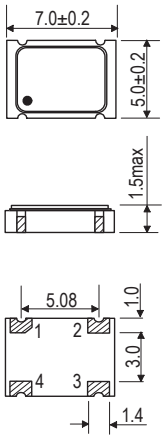

Pad Connections
1. N/C or Enable/Disable
2. GND
3. Output
4. +Vs

Solder pad layout

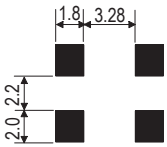

Output Waveform

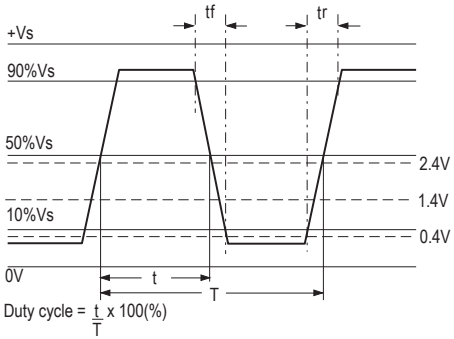

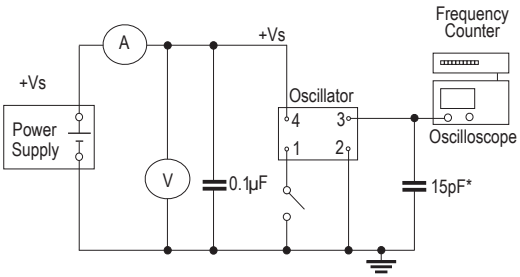

*Inclusive of jigging and equipment capacitance

Newwoo Electronics
NEWWOO
24G,China Phoenix Building No.2,No.2008 Shannan Road,Shenzhen,China 518026
Tel:+86(755)23990245 Fax:+86(755)23990241
Email:sales@newwoo.com Web:http://www.newwoo.com

Electrical Specifications - maximum limiting values

Frequency Range	Frequency Stability	Supply Voltage	Supply Current	Rise Time (tr)	Fall Time (tf)	Duty Cycle	Model Number
* See Developed Spot Frequencies	±20ppm	3.3V ±1%	40mA	6ns	6ns	45/55%	CFPS-74

Ordering Example

Frequency — 12.80MHz

Model No. — CFPS-74

*Note: Frequencies between 1.0MHz and 100.0MHz will be considered. Please contact our sales office. Please note that the rise and fall times listed are the maximum values we specify to cover various frequency breaks. In practice the actual values are generally lower depending upon the spot frequdncy chosen. For typical values please contact our sales office.

Tape (mm)

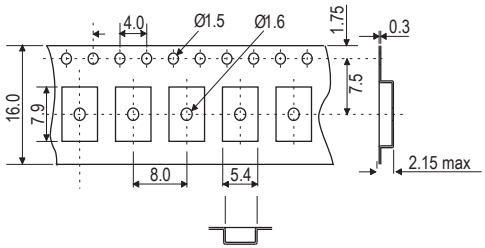

Reel (mm)

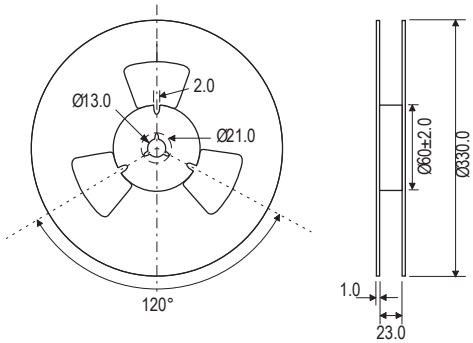

Newwoo Electronics
NEWWOO
24G,China Phoenix Building No.2,No.2008 Shannan Road,Shenzhen,China 518026
Tel:+86(755)23990245 Fax:+86(755)23990241
Email:sales@newwoo.com Web:http://www.newwoo.com